Experiment No. 1
Mesh and Nodal Analysis of Electrical Networks using Simulink

Aim: To analyse a given linear electrical network by (a) Mesh (Loop) Analysis and (b) Nodal Analysis using classical circuit theory, and to verify the theoretically calculated branch currents and node voltages by simulating the equivalent circuit in the Simulink environment.

Software / Components Required:

- MATLAB with Simulink and Simscape Electrical library.
- Simulink Blocks: DC Voltage Source, DC Current Source, Resistor, Current Sensor, Voltage Sensor, PS-Simulink Converter, Solver Configuration, Electrical Reference, Scope, Display.

Theory:

(a) Mesh (Loop) Analysis:
Mesh analysis is a systematic method of determining the current in each branch of a planar electrical network by applying Kirchhoff's Voltage Law (KVL) around independent closed loops (meshes). A fictitious circulating current, called the mesh current, is assumed in each mesh. For a network with 'b' branches, 'n' nodes and hence n-1 independent node equations, the number of independent mesh equations required is given by: $M = b - n + 1$. For each mesh, KVL is applied to write a voltage equation in terms of the unknown mesh currents. The resulting set of simultaneous linear equations is solved to obtain the mesh currents, from which every branch current can be found by superposition of the mesh currents common to that branch.

(b) Nodal Analysis:
Nodal analysis is based on Kirchhoff's Current Law (KCL), which states that the algebraic sum of currents leaving (or entering) any node of a network is zero. One node is selected as the reference node, and the voltages of all other independent nodes are expressed with respect to this reference. For a network with 'n' nodes, the number of independent nodal equations required is: $N = n - 1$. At each non-reference node, KCL is applied by expressing branch currents in terms of the unknown node voltages divided by the branch conductances.

(c) Simulation using MATLAB/Simulink

MATLAB/Simulink, together with the Simscape Electrical library, allows an electrical network to be built visually using physical component blocks (voltage/current sources, resistors, sensors) instead of writing differential/algebraic equations by hand. Every Simscape model requires a Solver Configuration block (which sets the numerical solver used to compute the physical network's steady-state/transient response) and an Electrical Reference block. Physical signals from Current Sensor and Voltage Sensor blocks are converted to normal Simulink signals using a PS-Simulink Converter block before they can be viewed on a Display block. Running the simulation numerically solves the same mesh/nodal equations derived analytically, and the steady-state readings on the Display blocks can be directly compared with the hand-calculated values, providing a practical verification of network theorems.

Circuit Diagrams:

(a) Circuit for Mesh Analysis:

The circuit chosen for mesh analysis consists of two voltage sources V1 and V2 and three resistors R1, R2 and R3, with R3 common to both meshes, as shown below.

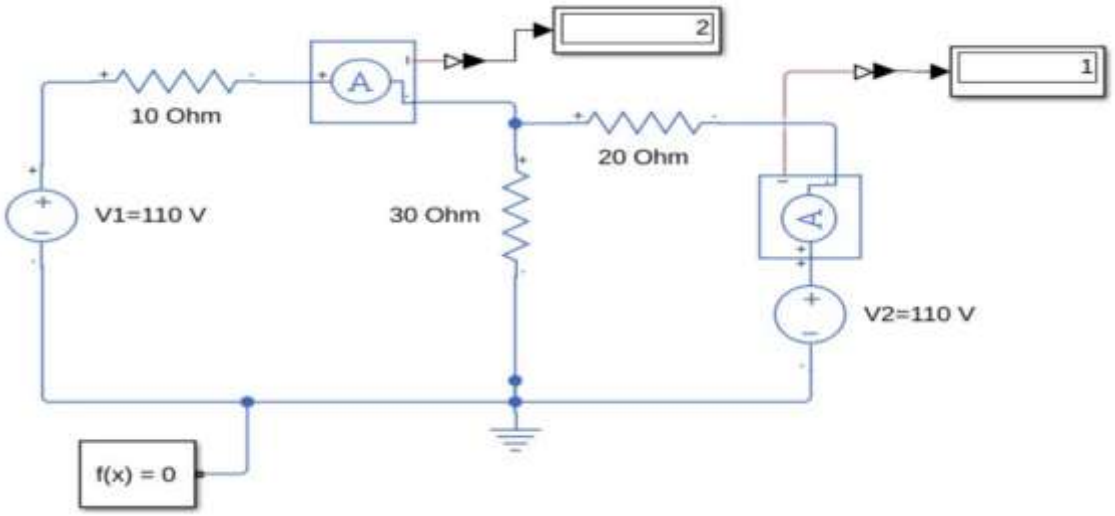

Fig. 1: Two-mesh circuit used for mesh analysis
(V1 = 110 V, V2 = 110 V, R1 = 10 Ω, R2 = 20 Ω, R3 = 30 Ω)

(b) Circuit for Nodal Analysis:

The circuit chosen for nodal analysis consists of two current sources I1 and I2 injected at nodes 1 and 2 respectively, and three resistors R1, R2 and R3 (R3 common to both nodes), with node 0 (bottom rail) taken as the reference/ground node.

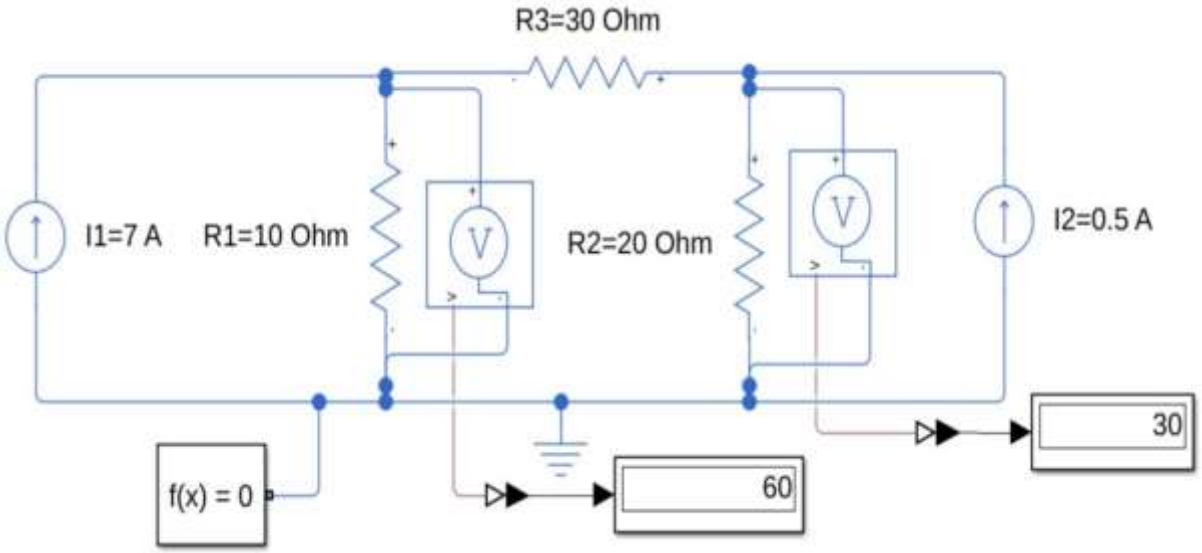

Fig. 2: Two-node circuit used for nodal analysis
(I1 = 7 A, I2 = 0.5 A, R1 = 10 Ω, R2 = 20 Ω, R3 = 30 Ω)

Procedure:

Simulink Model: Mesh Analysis

1. Open MATLAB and create a new Simulink model (New → Simulink Model).
2. Open the Simscape Electrical library browser (Simscape → Electrical → Specialized Power Systems / Simscape Electrical Foundation Library).
3. Drag one Solver Configuration block and one Electrical Reference block into the model.
4. Place two DC Voltage Source blocks and set their values to V1 = 110 V and V2 = 110 V respectively (double-click block → set 'Constant voltage').
5. Place three Resistor blocks and set their resistance values to R1 = 10 Ω, R2 = 20 Ω, R3 = 30 Ω.
6. Wire the two voltage sources and three resistors to form the two-mesh network exactly as in the circuit diagram (Fig. 1), with R3 forming the common branch between the two meshes.
7. Insert a Current Sensor block in series with R1 (to measure mesh current I1) and another in series with R2 (to measure mesh current I2).
8. Convert each Current Sensor's physical signal to a Simulink signal using a PS-Simulink Converter block.
9. Connect the converted signals to a Display blocks (for numeric steady-state readout).
10. Note down the steady-state values of I1 and I2 and tabulate them alongside the theoretically calculated values.

Simulink Model: Nodal Analysis

11. Create a new Simulink model and open the Simscape Electrical library as before.
12. Place one Solver Configuration block and one Electrical Reference block, and connect the Electrical Reference to the bottom (ground) rail of the network.
13. Place two DC Current Source blocks and set their values to I1 = 7 A and I2 = 0.5 A, oriented to inject current into node 1 and node 2 respectively.
14. Place three Resistor blocks and set R1 = 10 Ω, R2 = 20 Ω, and R3 = 30 Ω, and wire them exactly as in the circuit diagram (Fig. 2), with R3 connecting the two nodes.
15. Insert a Voltage Sensor across R1 (node 1 to ground) to measure V1, and another across R2 (node 2 to ground) to measure V2.
16. Convert both sensor outputs using PS-Simulink Converter blocks and connect them to a common individual Display blocks.
17. Run the simulation and record the steady-state node voltages V1 and V2 shown on the display blocks.
18. Compare the simulated node voltages with the values obtained from manual nodal analysis and tabulate the results.

Observation / Tabular Column:

(a) Mesh Analysis:

Quantity	Theoretical Value	Simulink Value
Mesh Current I1		
Mesh Current I2		
Branch Current I(R3) = I1 − I2		

(b) Nodal Analysis:

Quantity	Theoretical Value	Simulink Value
Node Voltage V1		
Node Voltage V2		
Branch Current I(R3) = (V1−V2)/R3		

Result:

The given electrical networks were successfully analysed using both Mesh (Loop) Analysis and Nodal Analysis, and the same networks were simulated in the Simulink environment.

- Mesh Analysis: The mesh currents were obtained as **I_1 = _____ A and I_2 = _____ A**, giving a common branch current of _____ **A** through R_3.
- Nodal Analysis: The node voltages were obtained as **V_1 = _____ V and V_2 = _____ V**, giving a common branch current of _____ **A** through R_3.