Experiment No. 02

Source Transformation and Star-Delta Transformation Using Simulink

Aim:

(a) To simulate a practical voltage source and a practical current source using Simulink and verify that a source transformation between them does not change the terminal voltage/current delivered to a load.

(b) To simulate a resistive star (Y) network and its equivalent delta (Δ) network using Simulink and verify that the two networks are electrically equivalent, i.e. they produce the same terminal voltage for the same excitation.

Software / Components Required:

- MATLAB with Simulink and Simscape Electrical library.
- Simulink Blocks: DC Voltage Source, DC Current Source, Resistor, Current Sensor, Voltage Sensor, PS-Simulink Converter, Solver Configuration, Electrical Reference, Scope, Display.

Theory:

(a) Source Transformation

A practical (real) voltage source consists of an ideal voltage source Vs in series with an internal resistance Rs. A practical current source consists of an ideal current source Is in parallel with an internal resistance Rs. The two representations are said to be equivalent if, for the same external load, they deliver identical terminal voltage and current — in other words, both must produce the same open-circuit voltage and the same short-circuit current at the terminals.

$$\textit{Voltage source} \rightarrow \textit{Current source}: \quad Is = Vs / Rs$$

$$\textit{Current source} \rightarrow \textit{Voltage source}: \quad Vs = Is \times Rs$$

In both forms the value of the series/parallel resistance Rs remains numerically the same; only its connection (series for the voltage form, parallel for the current form) changes. Source transformation is widely used to simplify circuits containing multiple sources before applying mesh or nodal analysis.

(b) Star – Delta (Y – Δ) Transformation

A three-terminal network of resistors can be arranged either in a star (Y) configuration, where the three resistors share one common central node, or in a delta (Δ) configuration, where the three resistors are connected directly between each pair of terminals with no central node. The two configurations are equivalent if the resistance measured between every pair of terminals is identical for both networks.

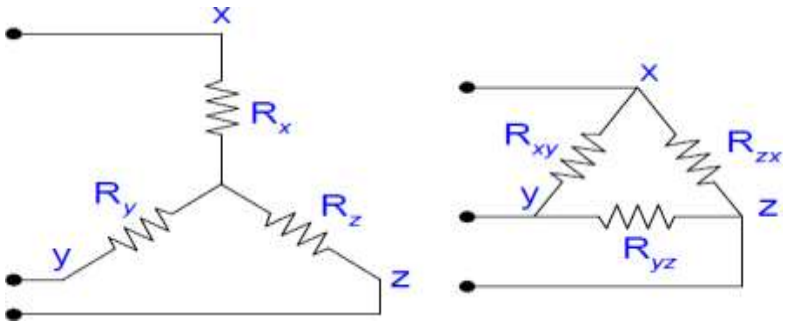

Star Network Delta Network

Transformation Equations:

Star to Delta Transformation	Delta to Star Transformation
$R_{yz} = R_y + R_z + \frac{R_y R_z}{R_x}$ $R_{xy} = R_x + R_y + \frac{R_x R_y}{R_z}$ $R_{zx} = R_z + R_x + \frac{R_z R_x}{R_y}$	$R_x = \frac{R_{xy} R_{xz}}{R_{xy} + R_{yz} + R_{zx}}$ $R_y = \frac{R_{yz} R_{yx}}{R_{xy} + R_{yz} + R_{zx}}$ $R_z = \frac{R_{zy} R_{zx}}{R_{xy} + R_{yz} + R_{zx}}$

Star-delta transformation is commonly used to reduce bridge-type or three-terminal resistive networks that cannot be simplified by plain series-parallel reduction, and finds direct application in three-phase load/transformer connections and in transmission-line network reduction.

Circuit Diagrams (Simulink Models)

Part A: Source Transformation

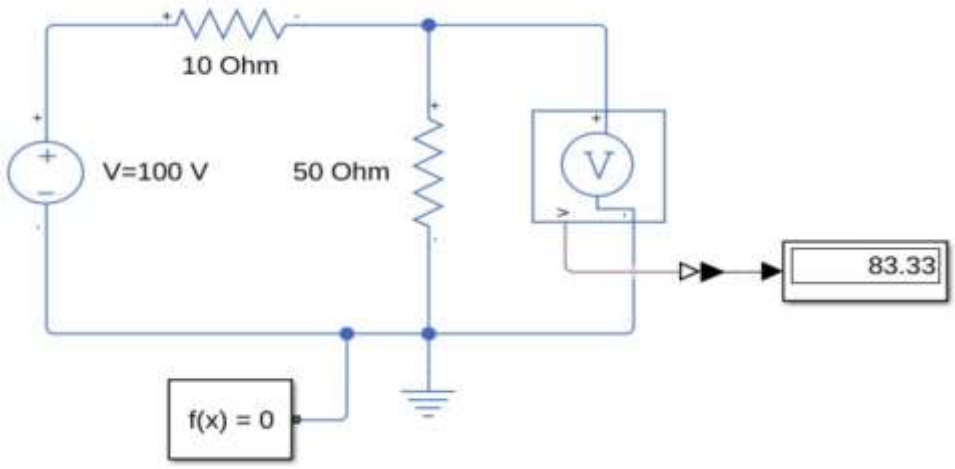

Fig. 1(a) Practical voltage source (V = 100 V, Rs = 10 Ω, RL = 50 Ω)

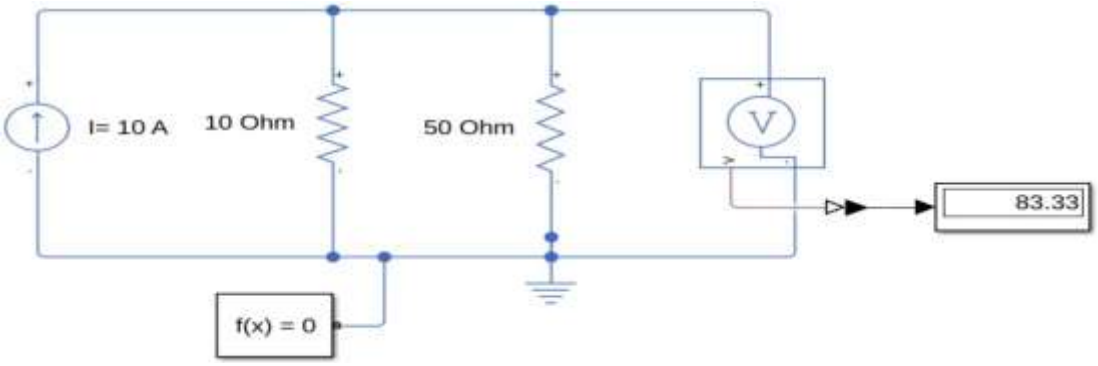

Fig. 1(b) equivalent practical current source (Is = 10 A, Rs = 10 Ω, RL = 50 Ω)

Part B : (i) Star-Delta Transformation

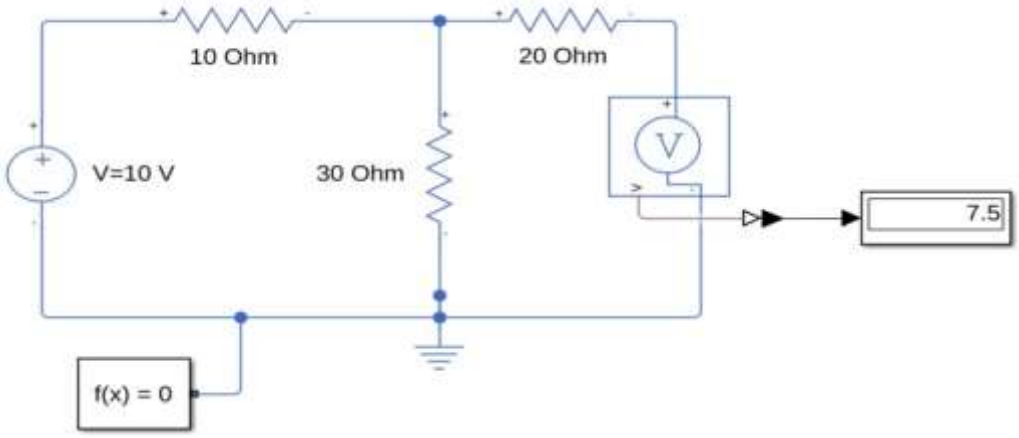

Fig. 2(a) Star (Y) network (R1 = 10 Ω, R2 = 20 Ω, R3 = 30 Ω, V = 10 V)

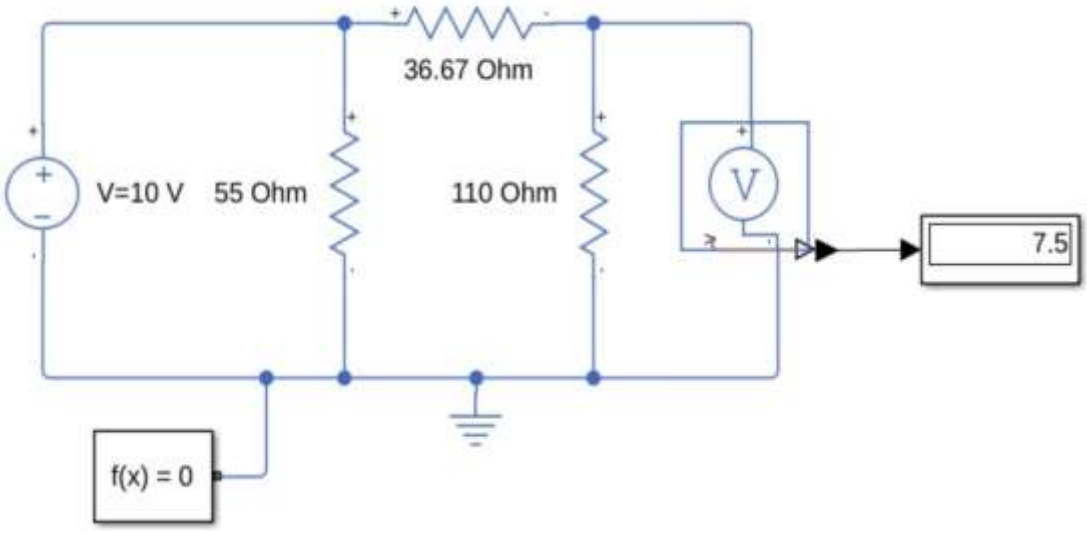

Fig. 2(b) equivalent delta (Δ) network (R_{AB} = 36.67 Ω, R_{BC} = 110 Ω, R_{CA} = 55 Ω)

Procedure:

Part A : Source Transformation

1. Build the practical voltage-source circuit: DC Voltage Source (V = 100 V) in series with Rs = 10 Ω, feeding a load resistor RL = 50 Ω to the Electrical Reference. Connect the Voltage Sensor across RL and note the Display reading.
2. Convert the source: compute Is = V / Rs and rebuild the circuit with a DC Current Source (Is) in parallel with Rs = 10 Ω and the same load RL = 50 Ω. Connect the Voltage Sensor across the parallel combination and note the Display reading.
3. Compare the two Display readings — they must be equal, confirming that the transformation preserves the terminal voltage.

Part B : Star-Delta Transformation

4. Build the star network with R1 = 10 Ω (source arm), R2 = 20 Ω (open/measuring arm) and R3 = 30 Ω (ground arm) meeting at the common star node, excited by V = 10 V. Connect the Voltage Sensor across the open terminal of R2 and the Electrical Reference, and note the Display reading.
5. Calculate the equivalent delta resistances RAB, RBC and RCA using the formulas in Section 3.2 and rebuild the circuit in delta form, keeping the same three external terminals (source, ground, and the open/measuring terminal).
6. Connect the Voltage Sensor between the same measuring terminal and the Electrical Reference, and note the Display reading.
7. Compare the two Display readings — they must be equal, confirming that the star and delta networks are equivalent.

Observations and Calculations:

Source Transformation

S.No	Configuration	Voltmeter Reading (V)
1	Practical voltage source	
2	Equivalent current source	

Star-Delta Transformation

S.No	Configuration	Voltmeter Reading (V)
1	Star network	
2	Equivalent delta network	

Result:

Source transformation and star-delta transformation were successfully verified using Simulink (Simscape Electrical).