EXPERIMENT No. 03

VERIFICATION OF THEVENIN'S AND SUPERPOSITION THEOREMS

Experiment 3(a): Verification of Thevenin's Theorem using Simulink

AIM: To simulate and experimentally verify Thevenin's Theorem for a given linear bilateral network and determine its equivalent circuit parameters (V_{th} and R_{th}).

Software / Components Required:

- MATLAB with Simulink and Simscape Electrical library.
- Simulink Blocks: DC Voltage Source, DC Current Source, Resistor, Current Sensor, Voltage Sensor, PS-Simulink Converter, Solver Configuration, Electrical Reference, Scope, Display.

Theory:

(a) Thevenin's Theorem: "Any two terminal network consisting of linear impedances and generators may be replaced at the two terminals by a single voltage source acting in series with an impedance. The voltage of the equivalent source is the open circuit voltage measured at the terminals of the network and the impedance, known as Thevenin's equivalent impedance, ZTH, is the impedance measured at the terminals with all the independent sources in the network reduced to zero".

Procedure:

Step 1:

1. Make the connections as shown in the circuit diagram by using MATLAB Simulink.
2. Measure the response 'I' in the load resistor by considering all the sources in the network.

Step 2: Finding Thevenin's Resistance (R_{TH})

1. Open the load terminals and replace all the sources with their internal impedances.
2. Measure the impedance across the open circuited terminal which is known as Thevenin's Resistance.

Step 3: Finding Thevenin's Voltage (V_{TH})

1. Open the load terminals and measure the voltage across the open circuited terminals.
2. Measured voltage will be known as Thevenin's Voltage.

Step 4: Thevenin's Equivalent Circuit

1. V_{TH} and R_{TH} are connected in series with the load.
2. Measure the current through the load resistor

$$I_L = \frac{V_{TH}}{R_{TH} + R_L}$$

Current measured from Thevenin's Equivalent Circuit should be same as current obtained from the actual circuit.

$$I = I_L$$

Hence Thevenin's Theorem is Verified

Circuit Diagrams (Simulink Models):

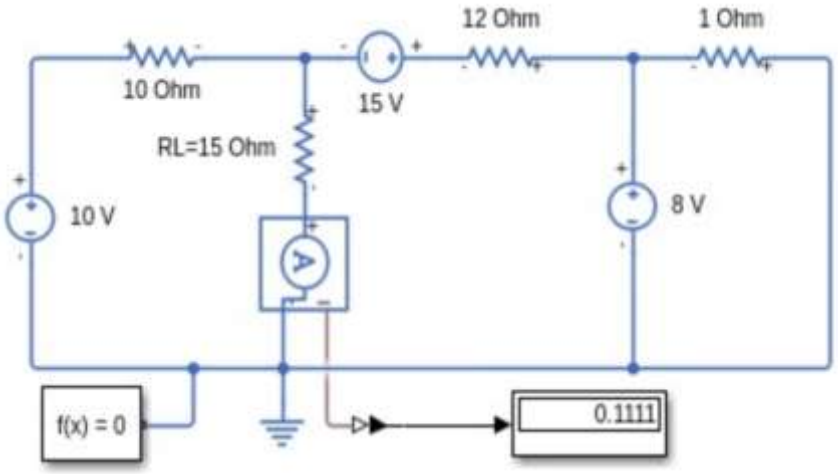

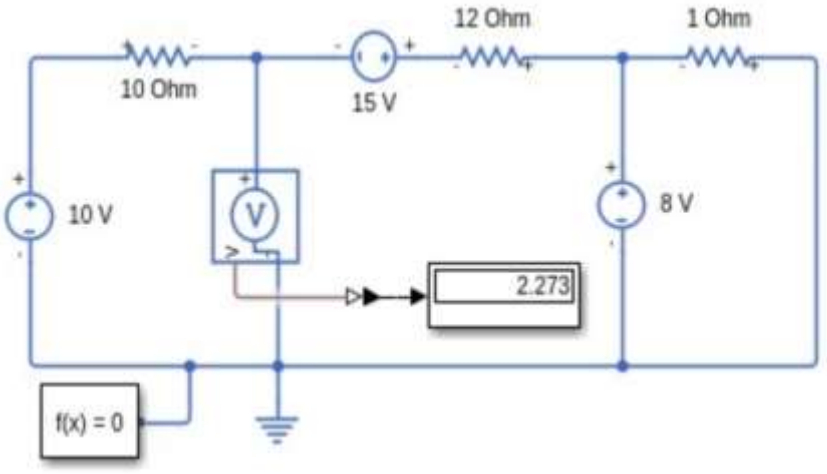

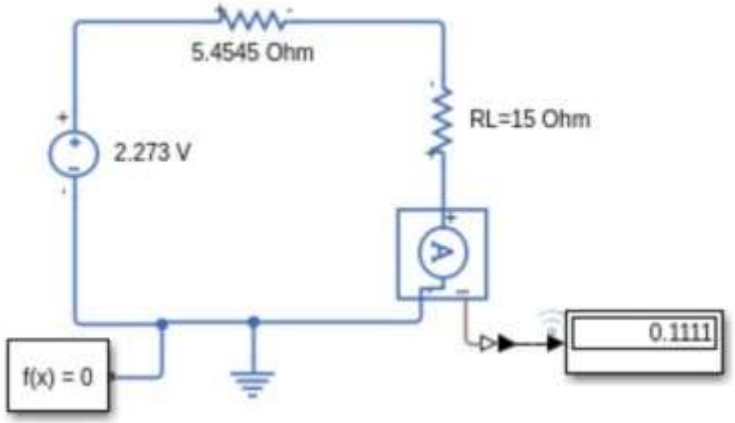

Step 1: By considering all the sources in the network,

Current through the Load Resistance RL = 0.111 A

Step 2: Finding Thevenin's Resistance = 5.4545 Ohms

Step 3: Finding Open Circuit Thevenin Voltage = 2.273 V

Step 4: Verifying Thevenin Equivalent circuit

Observations and Calculations:

Part A: Determination of V_{th} and R_{th}

Parameter	Theoretical	Practical
Open Circuit Voltage (V_{th})		
Thevenin Resistance (R_{th})		

Part B: Load Current Verification

Circuit State	Calculated I_L (A)	Measured I_L (A)
Original Circuit		
Thevenin Equivalent Circuit		

Result:

The Thevenin equivalent circuit for the given network was experimentally determined and verified against theoretical calculations.

- Calculated Values: $V_{th} =$ ____ V, $R_{th} =$ ____ Ω
- Measured Values: $V_{th} =$ ____ V, $R_{th} =$ ____ Ω
- Load Current (I_L) in Original Circuit: ____ mA
- Load Current (I_L) in Thevenin Equivalent Circuit: ____ mA

Conclusion:

Thevenin's theorem was successfully verified. The load current measured through the simplified single-source equivalent circuit closely matched the load current measured in the original complex circuit, proving that any linear bilateral network can be replaced by an equivalent voltage source in series with an equivalent resistance.

Experiment 3(b): Verification of Superposition Theorem using Simulink

AIM: To simulate and experimentally verify the Superposition Theorem in a DC network containing multiple independent energy sources.

Software / Components Required:

- MATLAB with Simulink and Simscape Electrical library.
- Simulink Blocks: DC Voltage Source, DC Current Source, Resistor, Current Sensor, Voltage Sensor, PS-Simulink Converter, Solver Configuration, Electrical Reference, Scope, Display.

Theory:

SUPERPOSITION THEOREM: "In a linear network with several independent sources which include equivalent sources due to initial conditions, and linear dependent sources, the overall response in any part of the network is equal to the sum of individual responses due to each independent source, considered separately, with all other independent sources reduced to zero". Consider the Network given below, verify the superposition theorem for the $20\,\Omega$ Resistor

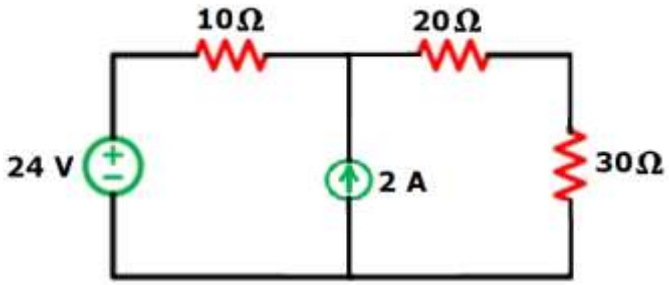

Procedure:

Step 1: Make the connections as shown in the circuit diagram by using MATLAB Simulink and measure the response 'I' in the $20\,\Omega$ resistor by considering all the sources 24 V, 2 A in the network

Step 2: Replace the 2 A source with its internal impedances (open circuited), Measure the response 'I_1' in the $20\,\Omega$ resistor by considering 24 V source in the network

Step 3: Replace the sources 24 V with its internal impedances (short circuited). Measure the response 'I_2' in the $20\,\Omega$ resistor by considering 2 A source in the network.

Step 4: The responses obtained in Step 1 should be equal to the sum of the responses obtained in Steps 2 and 3. $I=I_1+I_2$. Hence Superposition Theorem is verified.

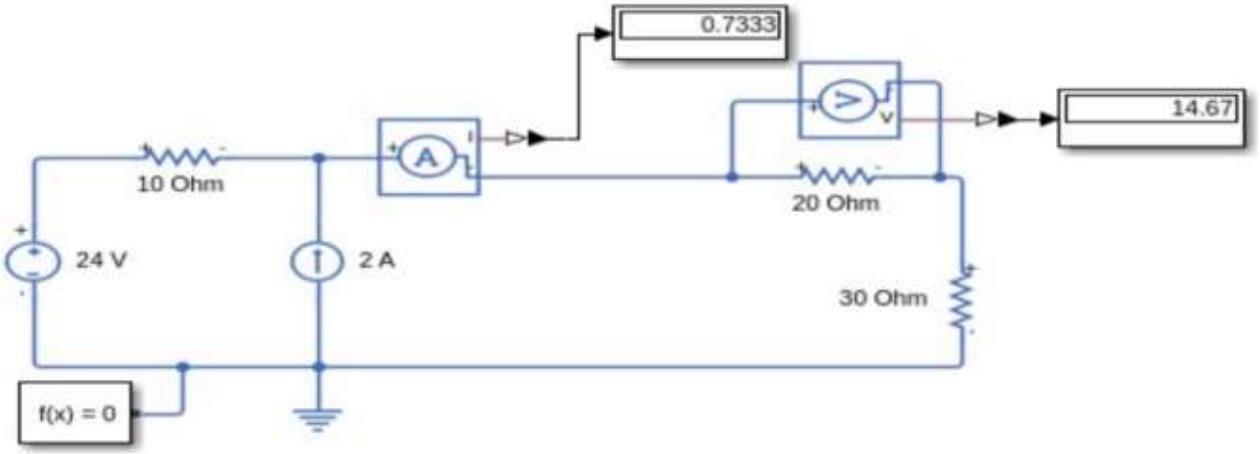
0.7333
14.67
10 Ohm
20 Ohm
24 V
2 A
30 Ohm
f(x) = 0

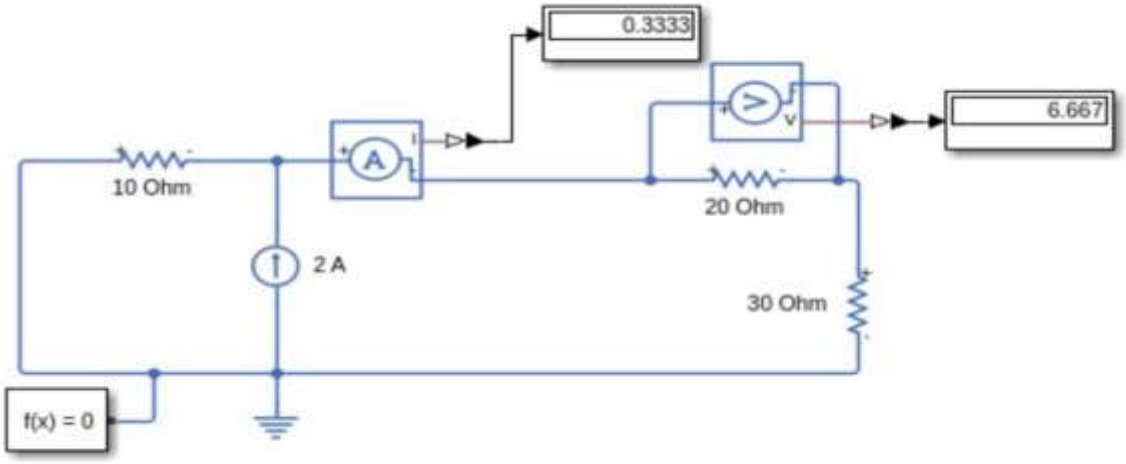
0.3333
6.667
10 Ohm
20 Ohm
2 A
30 Ohm
f(x) = 0

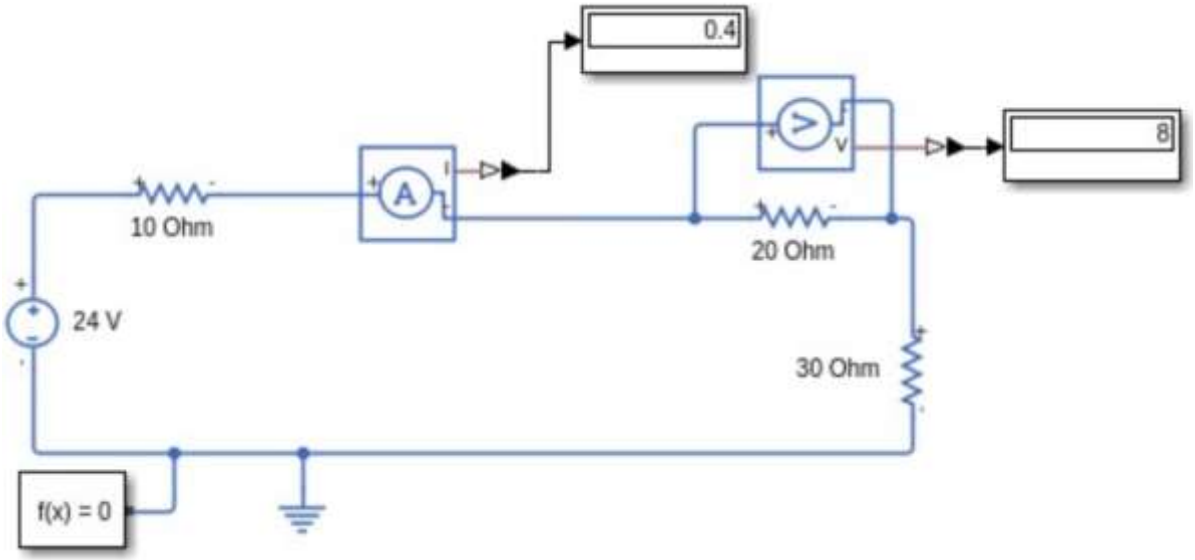
0.4
8
10 Ohm
20 Ohm
24 V
30 Ohm
f(x) = 0

Observation Table: Superposition Theorem

Operating Condition	Source 1 (V_1)	Source 2 (V_2)	Branch Voltage / Current (Calculated)	Branch Voltage / Current (Measured)
Case 1: V_1 Active	Active (V_1)	Deactivated (Short Circuit)	I' =	I' =
Case 2: V_2 Active	Deactivated (Short Circuit)	Active (V_2)	I'' =	I'' =
Case 3: Both Active	Active (V_1)	Active (V_2)	$I_{total} = I' + I''$	I_{total} =

Result:

The individual contribution of each independent source to the branch current/voltage was measured and summed to find the total response.

- **Response due to Source 1 alone (V_1 ON, V_2 replaced by short circuit):** $I' =$ ___ mA
- **Response due to Source 2 alone (V_2 ON, V_1 replaced by short circuit):** $I'' =$ ___ mA
- **Total calculated response ($I' + I''$):** ___ mA
- **Measured total response with both sources active:** $I_{total} =$ ___ mA

Conclusion:

The Superposition theorem was successfully verified. The algebraic sum of the branch responses produced by each independent source acting alone was equal to the total response measured when all sources acted simultaneously.