Experiment No. 4

Two-Port Network Analysis using Z, Y, h and ABCD Parameters using Simulink

1. Aim

To determine the Z (impedance), Y (admittance), h (hybrid) and ABCD (transmission) parameters of a given two-port electrical network analytically, and to verify the calculated parameters by simulating the open-circuit and short-circuit test conditions of the network in the Simulink environment.

2. Software / Components Required

- MATLAB with Simulink and Simscape Electrical (Specialized Power Systems / Simscape Electrical library)
- Simulink blocks: DC Voltage Source, Resistor, Current Sensor (Ammeter), Voltage Sensor (Voltmeter), Solver Configuration, Electrical Reference, a Controlled Current Source driven by a Constant = 0 block (used as an ideal open-circuit element, shown as 'f(x) = 0' in the model), Display

3. Theory

A two-port network is an electrical network with two pairs of terminals — an input port (V_1, I_1) and an output port (V_2, I_2) — through which the network interacts with the outside world. Any linear, passive, bilateral two-port network can be completely characterized by a set of four parameters that relate the port voltages and currents. The four most commonly used parameter sets are the Z-parameters, Y-parameters, h-parameters and ABCD (transmission) parameters.

3.1 Z-Parameters (Open-Circuit Impedance Parameters)

The Z-parameters relate the port voltages to the port currents:

$$V1 = Z11\ I1 + Z12\ I2$$

$$V2 = Z21\ I1 + Z22\ I2$$

Each Z-parameter is determined by an open-circuit test i.e., with one of the ports left open (so that its current is zero): $Z11 = V1/I1\ |(I2=0)$ $Z21 = V2/I1\ |(I2=0)$ $Z12 = V1/I2\ |(I1=0)$ $Z22 = V2/I2\ |(I1=0)$

3.2 Y-Parameters (Short-Circuit Admittance Parameters)

The Y-parameters relate the port currents to the port voltages, and are the inverse of the Z-parameter matrix:

$$I1 = Y11\ V1 + Y12\ V2$$

$$I2 = Y21\ V1 + Y22\ V2$$

Each Y-parameter is determined by a short-circuit test i.e., with one of the ports shorted (so that its voltage is zero):

$$Y11 = I1/V1\ |(V2=0) \quad Y21 = I2/V1\ |(V2=0) \quad Y12 = I1/V2\ |(V1=0) \quad Y22 = I2/V2\ |(V1=0)$$

3.3 h-Parameters (Hybrid Parameters)

The h-parameters use a mixture of open-circuit and short-circuit conditions, and are widely used for modelling transistors and amplifier circuits:

$$V1 = h11\ I1 + h12\ V2$$

$$I2 = h21\ I1 + h22\ V2$$

$$h11 = V1/I1\ |(V2=0) \qquad h21 = I2/I1\ |(V2=0) \qquad h12 = V1/V2\ |(I1=0) \qquad h22 = I2/V2\ |(I1=0)$$

3.4 ABCD (Transmission) Parameters

The ABCD parameters express the input port quantities in terms of the output port quantities, and are especially useful for cascaded networks such as transmission lines and filter sections:

$$V1 = A\ V2 - B\ I2$$

$$I1 = C\ V2 - D\ I2$$

$$A = V1/V2\ |(I2=0) \qquad C = I1/V2\ |(I2=0) \qquad B = -V1/I2\ |(V2=0) \qquad D = -I1/I2\ |(V2=0)$$

For any reciprocal (passive, bilateral) network, the ABCD parameters satisfy the identity AD − BC = 1, which serves as a useful check on the calculated values.

3.5 Inter-Relationship Between Parameter Sets

For a network described by its Z-parameters, the remaining parameter sets can be obtained directly using standard conversion formulae. If $\Delta z = Z11\ Z22 - Z12\ Z21$ denotes the determinant of the Z-matrix, then:

$$Y11 = Z22/\Delta z, \quad Y12 = -Z12/\Delta z, \quad Y21 = -Z21/\Delta z, \quad Y22 = Z11/\Delta z$$

$$h11 = \Delta z/Z22, \quad h12 = Z12/Z22, \quad h21 = -Z21/Z22, \quad h22 = 1/Z22$$

$$A = Z11/Z21, \quad B = \Delta z/Z21, \quad C = 1/Z21, \quad D = Z22/Z21$$

4. Circuit Diagram

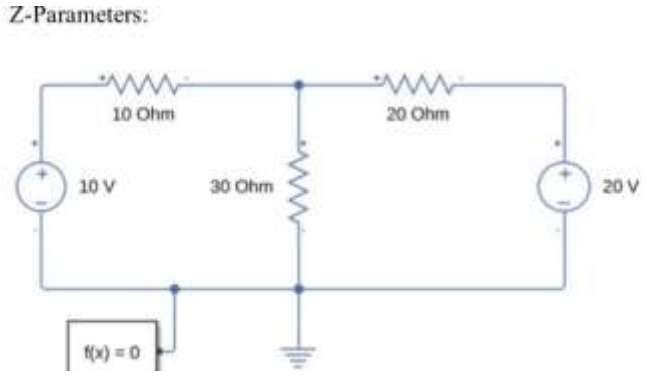

Fig. 4.1 — T-network two-port built in Simulink (R1 = 10 Ω, R2 = 20 Ω, R3 = 30 Ω)

5. Procedure

5.1 Open-Circuit Test : Determination of Z-Parameters

1. Build the T-network (R1, R2, R3) in Simulink using Resistor blocks, along with one Solver Configuration block and one Electrical Reference block.
2. Connect a DC Voltage Source V1 = 10 V at Port 1. Replace the Port 2 source with an 'f(x) = 0' controlled current source so that Port 2 is effectively open (I2 = 0).

3. Insert a Current Sensor (Ammeter) in series with R1 to read I1, and a Voltage Sensor (Voltmeter) across Port 2 to read V2. Connect both to Display blocks.
4. Run the simulation and note the steady readings: I1 = 0.25 A and V2 = 7.5 V. Compute Z11 = V1/I1 and Z21 = V2/I1.
5. Repeat the test with the roles reversed — apply V2 = 20 V at Port 2, replace the Port 1 source with the 'f(x) = 0' block (I1 = 0), and read the Voltmeter at Port 1 (V1) and the Ammeter in series with R2 (I2).
6. Note the readings V1 = 12 V and I2 = 0.4 A, and compute Z12 = V1/I2 and Z22 = V2/I2.

5.2 Short-Circuit Test: Determination of Y-Parameters

7. Using the same T-network, connect the DC Voltage Source V1 = 10 V at Port 1, and short-circuit Port 2 directly (V2 = 0) by wiring its two terminals together.
8. Insert Current Sensor (Ammeter) blocks in series with R1 and R2 to read I1 and I2 respectively.
9. Run the simulation and note the readings I1 = 0.4545 A and I2 = 0.2727 A. Since the ammeter in the R2 branch reads the current leaving the network at the shorted port, this reading corresponds to −I2 in the standard port-current convention. Compute Y11 = I1/V1 and Y21 = −I2(measured)/V1.
10. Repeat the test with the voltage source moved to Port 2 (V2 = 20 V) and Port 1 short-circuited (V1 = 0). Note the readings I1 = 0.5455 A (into the short) and I2 = 0.7273 A, and compute Y12 = −I1(measured)/V2 and Y22 = I2/V2.

5.3 Determination of h-Parameters and ABCD Parameters

11. The h11 and h21 parameters use the same short-circuit condition (Port 2 shorted, V1 applied) as the Y11/Y21 test in Section 5.2 — reuse the same readings: h11 = V1/I1 and h21 = −I2(measured)/I1.
12. The h12 and h22 parameters use the same open-circuit condition (Port 1 open, V2 applied) as the Z12/Z22 test in Section 5.1 — reuse the same readings: h12 = V1/V2 and h22 = I2/V2.
13. Using the Z-parameters obtained in Section 5.1, compute the determinant $\Delta z = Z11\ Z22 - Z12\ Z21$, and calculate the ABCD parameters as A = Z11/Z21, B = Δz/Z21, C = 1/Z21, D = Z22/Z21.
14. Verify the reciprocity condition AD − BC = 1 for the network, confirming that the network is passive and bilateral.
15. Tabulate all four parameter sets (Z, Y, h, ABCD) along with the values obtained from the Simulink simulation for comparison.

6. Simulink Models and Simulation Results

6.1 Open-Circuit Test — Z11, Z21 (Port 2 Open, V1 = 10 V applied)

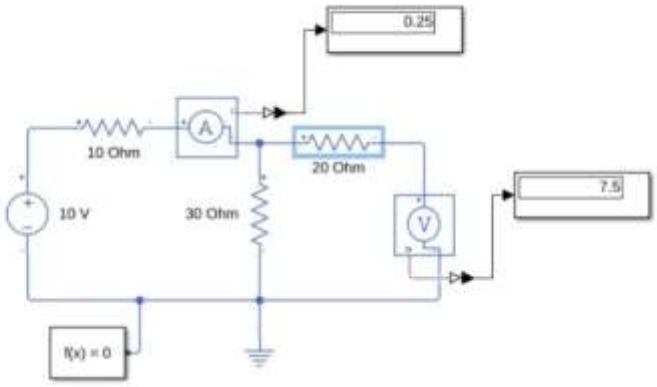

Fig. 6.1 — Simulink model: Port 1 driven with V1 = 10 V, Port 2 open. I1 = 0.25 A, V2 = 7.5 V

6.2 Open-Circuit Test — Z12, Z22 (Port 1 Open, V2 = 20 V applied)

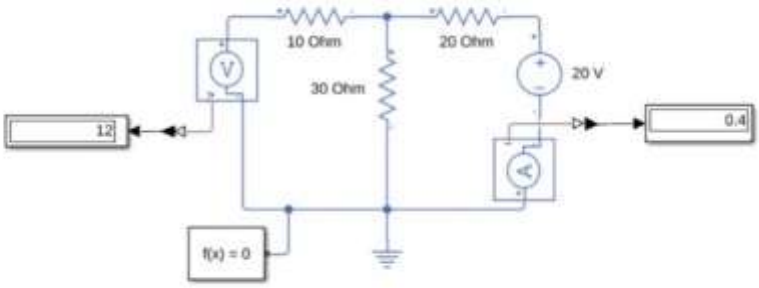

Fig. 6.2 — Simulink model: Port 2 driven with V2 = 20 V, Port 1 open. V1 = 12 V, I2 = 0.4 A

6.3 Short-Circuit Test — Y11, Y21, h11, h21 (Port 2 Shorted, V1 = 10 V applied)

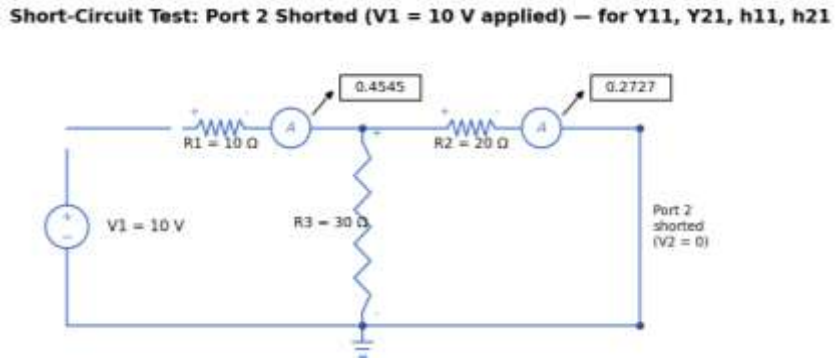

Fig. 6.3 — Simulink model: Port 1 driven with V1 = 10 V, Port 2 short-circuited. I1 = 0.4545 A, I2 = 0.2727 A

6.4 Short-Circuit Test — Y12, Y22 (Port 1 Shorted, V2 = 20 V applied)

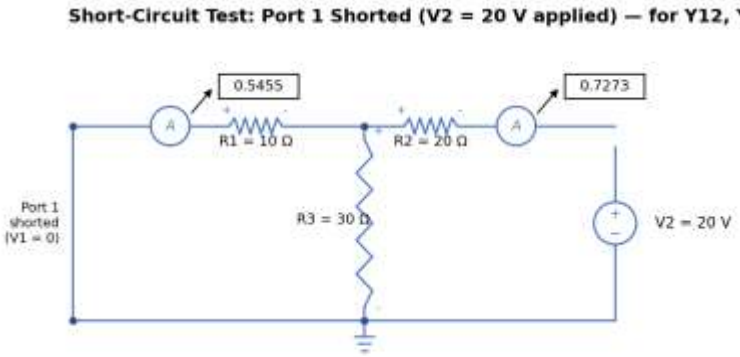

Fig. 6.4 — Simulink model: Port 2 driven with V2 = 20 V, Port 1 short-circuited. I1 = 0.5455 A, I2 = 0.7273 A

6.5 Open-Circuit Test — h12, h22 (reuses the Z12, Z22 test condition)

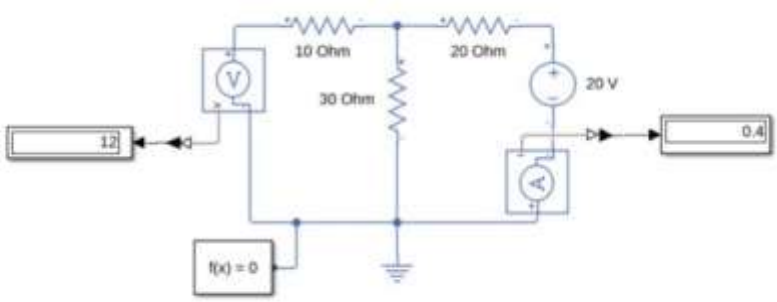

Fig. 6.5 — Same physical test as Fig. 6.2 (Port 1 open, V2 = 20 V applied), read for h12 and h22

7. Calculations

For the T-network of Fig. 4.1 with R1 = 10 Ω, R2 = 20 Ω and R3 = 30 Ω:

7.1 Z-Parameters

From the open-circuit test readings (Section 6.1, 6.2):

$$Z11 = V1/I1 = 10 / 0.25 = 40\ \Omega \qquad Z21 = V2/I1 = 7.5 / 0.25 = 30\ \Omega$$

$$Z12 = V1/I2 = 12 / 0.4 = 30\ \Omega \qquad Z22 = V2/I2 = 20 / 0.4 = 50\ \Omega$$

Verification by formula (T-network):

$$Z11 = R1 + R3 = 10 + 30 = 40\ \Omega \qquad Z22 = R2 + R3 = 20 + 30 = 50\ \Omega \qquad Z12 = Z21 = R3 = 30\ \Omega$$

$$\Delta z = Z11\ Z22 - Z12\ Z21 = (40)(50) - (30)(30) = 2000 - 900 = 1100$$

7.2 Y-Parameters

From the short-circuit test readings (Section 6.3, 6.4), with the measured current reversed in sign where it flows out of the network at the shorted port:

$$Y11 = I1/V1 = 0.4545 / 10 = 0.04545\ S \qquad Y21 = -I2/V1 = -0.2727 / 10 = -0.02727\ S$$

$$Y12 = -I1/V2 = -0.5455 / 20 = -0.02727\ S \qquad Y22 = I2/V2 = 0.7273 / 20 = 0.03636\ S$$

Verification by formula (from Z-parameters):

$$Y11 = Z22/\Delta z = 50/1100 = 0.04545\ S \qquad Y22 = Z11/\Delta z = 40/1100 = 0.03636\ S \qquad Y12 = Y21 = -Z12/\Delta z = -30/1100 = -0.02727\ S$$

7.3 h-Parameters

h11 and h21 reuse the short-circuit readings of Section 6.3; h12 and h22 reuse the open-circuit readings of Section 6.2/6.5:

$$h11 = V1/I1 = 10 / 0.4545 = 22.0\ \Omega \qquad h21 = -I2/I1 = -0.2727 / 0.4545 = -0.6$$

$$h12 = V1/V2 = 12 / 20 = 0.6 \qquad h22 = I2/V2 = 0.4 / 20 = 0.02\ S$$

Verification by formula (from Z-parameters):

$$h11 = \Delta z/Z22 = 1100/50 = 22\ \Omega \quad h12 = Z12/Z22 = 30/50 = 0.6 \quad h21 = -Z21/Z22 = -30/50 = -0.6$$
$$h22 = 1/Z22 = 1/50 = 0.02\ S$$

7.4 ABCD Parameters (derived from Z-parameters)

$$A = Z11/Z21 = 40/30 = 1.3333$$

$$B = \Delta z/Z21 = 1100/30 = 36.667\ \Omega$$

$$C = 1/Z21 = 1/30 = 0.03333\ S$$

$$D = Z22/Z21 = 50/30 = 1.6667$$

Reciprocity check:

$$AD - BC = (1.3333)(1.6667) - (36.667)(0.03333) = 2.2222 - 1.2222 = 1.0 \quad \checkmark \text{(network is reciprocal)}$$

8. Observation / Tabular Column

8.1 Z-Parameters

Parameter	Simulated Readings Used	Theoretical Value	Simulink Value
Z11	V1=10V, I1=0.25A (I2=0)	40.00 Ω	40.00 Ω
Z21	V1=10V, V2=7.5V (I2=0)	30.00 Ω	30.00 Ω
Z12	V2=20V, V1=12V (I1=0)	30.00 Ω	30.00 Ω
Z22	V2=20V, I2=0.4A (I1=0)	50.00 Ω	50.00 Ω

8.2 Y-Parameters

Parameter	Simulated Readings Used	Theoretical Value	Simulink Value
Y11	V1=10V, I1=0.4545A (V2=0)	0.04545 S	0.04545 S
Y21	V1=10V, I2=0.2727A (V2=0)	−0.02727 S	−0.02727 S
Y12	V2=20V, I1=0.5455A (V1=0)	−0.02727 S	−0.02727 S
Y22	V2=20V, I2=0.7273A (V1=0)	0.03636 S	0.03636 S

8.3 h-Parameters

Parameter	Simulated Readings Used	Theoretical Value	Simulink Value
h11	V1=10V, I1=0.4545A (V2=0)	22.00 Ω	22.00 Ω
h21	I1=0.4545A, I2=0.2727A (V2=0)	−0.600	−0.600
h12	V1=12V, V2=20V (I1=0)	0.600	0.600
h22	I2=0.4A, V2=20V (I1=0)	0.0200 S	0.0200 S

8.4 ABCD Parameters

Parameter	Formula (from Z)	Theoretical Value	Simulink Value
A	Z11 / Z21	1.3333	1.3333
B	Δz / Z21	36.667 Ω	36.667 Ω
C	1 / Z21	0.03333 S	0.03333 S
D	Z22 / Z21	1.6667	1.6667

9. Result

The Z, Y, h and ABCD parameters of the given two-port T-network were successfully determined both analytically and by simulating the required open-circuit and short-circuit test conditions in Simulink.

- Z-Parameters: Z11 = 40 Ω, Z12 = Z21 = 30 Ω, Z22 = 50 Ω.
- Y-Parameters: Y11 = 0.04545 S, Y12 = Y21 = −0.02727 S, Y22 = 0.03636 S.
- h-Parameters: h11 = 22 Ω, h12 = 0.6, h21 = −0.6, h22 = 0.02 S.
- ABCD Parameters: A = 1.3333, B = 36.667 Ω, C = 0.03333 S, D = 1.6667, with AD − BC = 1 confirming reciprocity.

Thus, the two-port network was successfully characterized in terms of its Z, Y, h and ABCD parameters, and the results were verified using MATLAB/Simulink.