EXPERIMENT No. 5

Block Diagram Reduction and Verification using Simulink

1. Aim

To reduce a given block diagram of a control system to a single equivalent block using the standard rules of block diagram algebra, and to verify the reduced transfer function by constructing the original block diagram in MATLAB/Simulink and comparing the simulated gain with the analytically reduced result.

2. Software Required:

MATLAB with Simulink toolbox

3. Theory:

A block diagram represents a control system using functional blocks (each representing a transfer function), summing junctions (which add or subtract signals), and take-off points (from which a signal is tapped off unchanged to feed another part of the system). Block diagram reduction is the process of combining these blocks step by step, using a small set of equivalence rules, until the entire diagram collapses to a single block relating the output to the input.

The main reduction rules used are:

- Series (cascade) rule: blocks G1 and G2 connected in series (output of one feeding directly into the other) combine into a single block of gain $G1 \cdot G2$.
- Parallel rule: blocks G1 and G2 fed by the same input and combined at a summing junction combine into a single block of gain $(G1 \pm G2)$, sign depending on the summing junction.
- Feedback rule: a forward block G with a feedback path H around it (summing junction with sign $\mp$ at the input of G) reduces to a single block of gain $G / (1 \mp G \cdot H)$. For negative feedback this is $G / (1 + GH)$.
- Moving a take-off point ahead of / behind a block, and moving a summing point ahead of / behind a block, so that loops can be isolated and combined one at a time (not required for the diagram used in this experiment, since it is already in a directly reducible form).

Applying these rules repeatedly, starting with the innermost loop and working outward, reduces any block diagram to a single equivalent transfer function block.

4. Given Block Diagram

The block diagram to be reduced is shown below. It consists of three forward-path blocks G1, G2, G3, a minor (inner) feedback loop with gain H1 around G2, and a major (outer) feedback loop with gain H2 around the entire forward path. The input is R and the output is C.

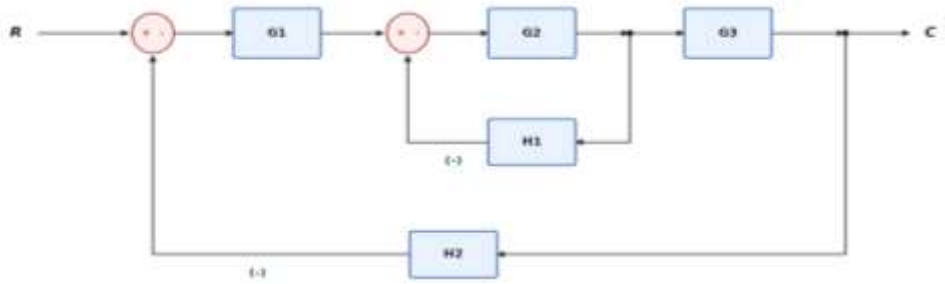

Fig. 1: Given Block Diagram

5. Procedure

Part A: Manual Block Diagram Reduction

1. Identify the innermost loop. Here, block G2 has a feedback path H1 around it (negative feedback, since the summing junction before G2 has a − sign on that input). Reduce this minor loop using the feedback rule:

$$G2' = \frac{G2}{1 + G2\,H1}$$

2. Combine the now-series chain of blocks G1, G2′ and G3 into a single forward-path block using the series rule:

$$Gf = G1 \cdot G2' \cdot G3 = \frac{G1\,G2\,G3}{1 + G2\,H1}$$

3. The diagram now reduces to a single forward block Gf with one remaining feedback path H2 around it (negative feedback). Apply the feedback rule once more to eliminate this loop:

$$\frac{C}{R} = \frac{Gf}{1 + Gf \cdot H2}$$

4. Substitute Gf and simplify to obtain the final, single equivalent block:

$$\frac{C}{R} = \frac{G1\,G2\,G3}{1 + G2\,H1 + G1\,G2\,G3\,H2}$$

The complete reduction sequence is shown graphically below:

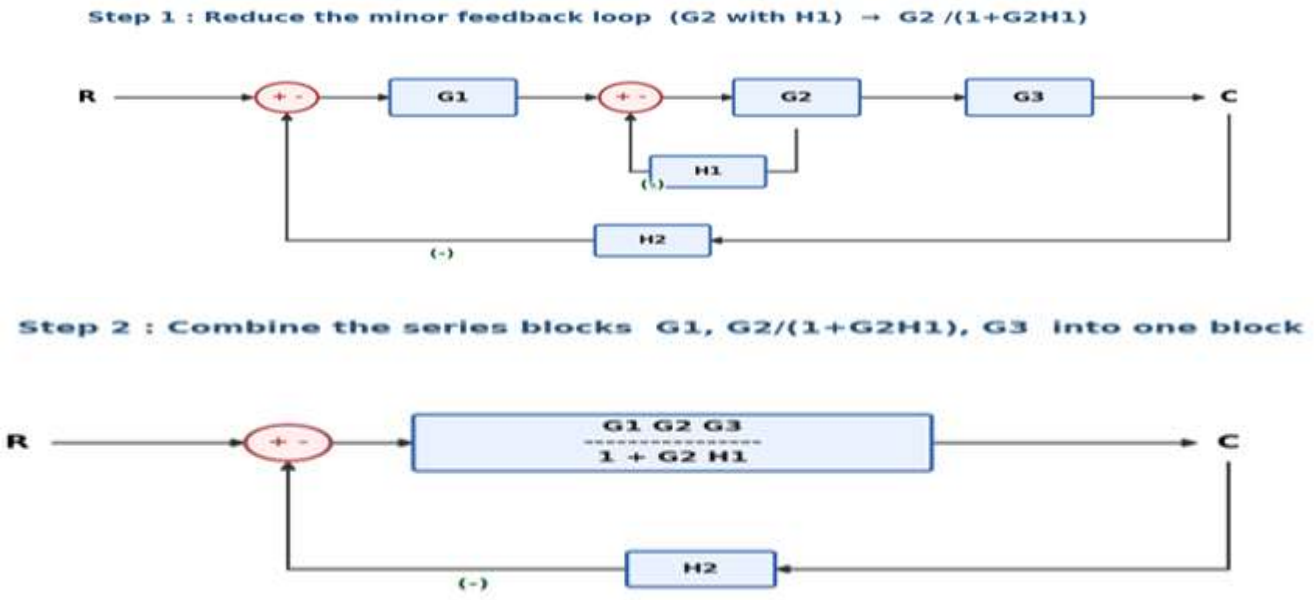

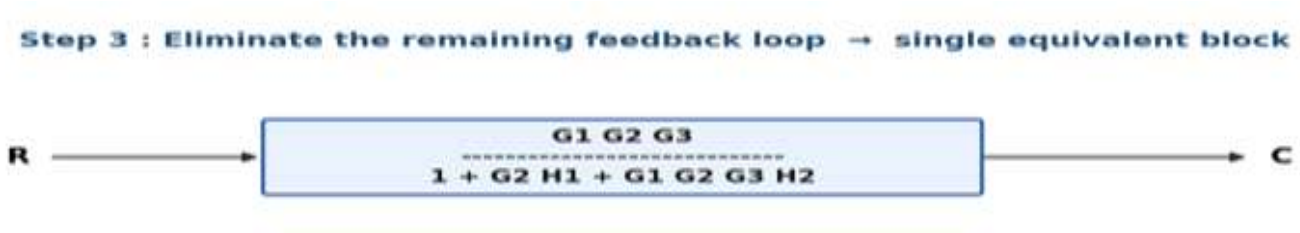

Fig. 2: Step-by-step block diagram reduction

Part B: Verification using Simulink

The original (unreduced) block diagram of Fig. 1 is built directly in Simulink using Sum blocks (for the summing junctions) and Gain blocks (for G1, G2, G3, H1, H2), as shown in Fig. 3. The reduced transfer function from Part A is then verified by comparing it against the steady output value obtained from this simulation.

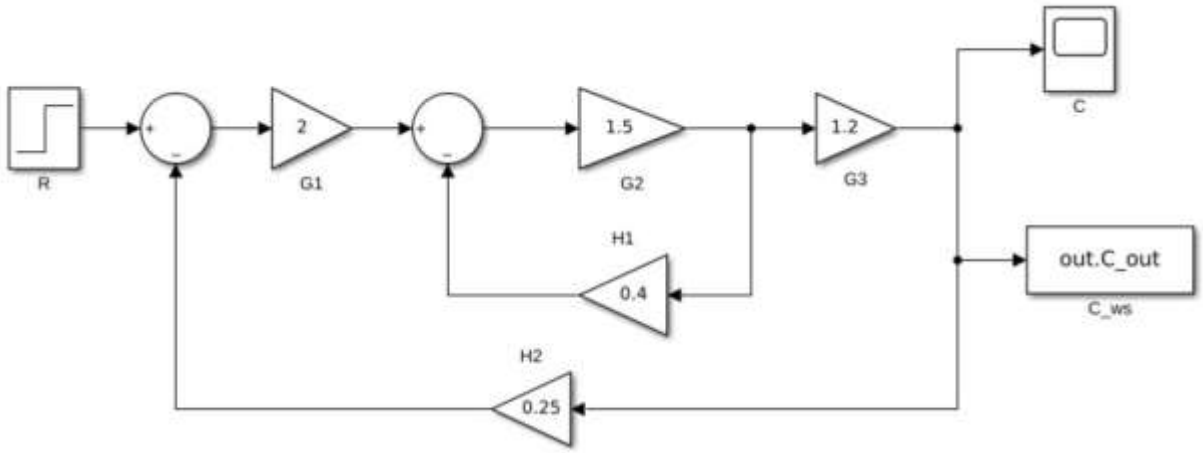

Fig. 3: Simulink implementation of the given block diagram

1. Open Simulink and create a new blank model.
2. Place a Step block (Simulink → Sources) to represent the input R.
3. Place two Sum blocks: Sum1 with signs [+ −] (for the outer summing junction before G1) and Sum2 with signs [+ −] (for the inner summing junction before G2).
4. Place five Gain blocks (Simulink → Math Operations) and set their gain values to G1, G2, G3, H1 and H2 respectively.
5. Wire the model as follows: R → Sum1(+); Sum1 output → G1 → Sum2(+); Sum2 output → G2; the output of G2 branches three ways — into G3, into H1 (feedback into Sum2's second input, closing the minor loop), and this same node is the take-off point for the minor loop; the output of G3 (which is C) branches into the Scope / To Workspace block and into H2 (feedback into Sum1's second input, closing the major loop).
6. Assign numerical values to G1, G2, G3, H1, H2, run the simulation with a unit step input (R = 1), and read the steady output value of C. Since the system has no dynamics, C reaches its final value immediately at t = 0+ and remains constant thereafter.
7. Compare this simulated value of C (with R = 1) against the value predicted by the reduced transfer function expression derived in Part A.

6. Results

Sample gain values were used to numerically verify the derived transfer function:

G1	G2	G3	H1	H2
2.0	1.5	1.2	0.4	0.25

Method	Computed value of C/R
Analytical: Manual block diagram reduction	1.440000
Simulation: Simulink model	1.440000

The transfer function value obtained from the Simulink model exactly matches the value obtained by manual block diagram reduction.

7. Conclusion

The given block diagram was successfully reduced to a single equivalent transfer function using the standard rules of block diagram algebra (series, feedback):

$$\frac{C}{R} = \frac{G1\ G2\ G3}{1\ +\ G2\ H1\ +\ G1\ G2\ G3\ H2}$$

This result was verified by constructing the original, unreduced block diagram in Simulink and comparing the simulated input–output gain against the analytically reduced value; both were found to be identical, confirming the correctness of the reduction procedure and demonstrating that Simulink can be used as an independent tool for verifying manual block diagram simplification.